POOL TECHNOLOGY
CONTROL SYSTEM

--- RC Module (remote control) ---

1. Safety instructions

Read this user manual before installation and unit activation. Should you need any explanation or should you have any doubts, do not hesitate to contact Your VArio supplier.

If you use any personal electronic medical device (peacemaker, etc.), please consult the device manufacturer concerning potential radio interference which may affect the medical device. VArio system modules use radio communication on 869,530 MHz with peak output ≤ 20mW.

The unit shall be always installed by a trained professional. Always disconnect the main power supply before performing repairs or maintenance, or before connecting additional external devices.

The DIN module must always be powered from the safety-protected power source of filtration or recirculation pump.

The system uses radio-frequency communication. It is forbidden to use the device near mines / quarries or any places with possible risk of explosion.

2. General information

Pool control system consists of a VA RIO DIN module, which can control up to 5 output relays (filtering, dosing, lights, heating, attraction), and a local radio remote control unit VA RIO RC (furthermore RC module). The relay outputs are pre-set from the factory as follows:

DIN module

R1 – Filtration (4 programmable timers - programs)
R2 – Dosing (operation depends on filtering time - 25%/50%/75%/100% of filtering time) / Attraction2 (timer)
R3 – Lights (timer - 15 min. step: 0/15/30/45/60/90/120/180/240 min. or permanent ON)
R4 – Heating (heating or cooling based on the pre-set/actual temperature)
R5 – Attraction (timer - 15 min. step: 0/15/30/45/60/75/90/105/120 min)

RC module provides information and statuses of relay contacts and outputs and allow the user to modify the parameters. When a dosing station is connected (VA DOS EXACT / VA DOS BASIC / VA DOS FLOC / VA FOR SALT pH), the RC will display actual water quality parameters as measured by the dosing unit and will also allow the user to change the operating parameters of the dosing unit.

3. Technical information

DIN module (VArio)

Dimensions (w – h – d)	106,3 x 57,8 x 90,2 mm
Material	ABS nylon 66
Flammability Class	UL94V-066
Power supply/consumption	100-250 VAC 50-60 Hz / max. 12W
Temperature sensor:	0 - 50 °C (±0,5 °C)
Output relays:	8 A 250 V (potential-free contact)
Frequency / Band	869,530 / P, max. output ≤ 20mW

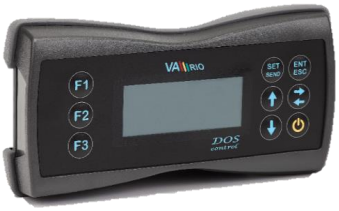

RC module (VA RIO RC)

Dimensions (w – h – d)	81 x 165 x 31 mm
Material	ABS
Power supply	4,5V, 3x AA (rechargeable batteries may be used)
Frequency / Band	869,530 / P, max. power ≤ 20mW

Internal EEPROM memory

The DIN module automatically stores the measured water temperature into internal memory – 3x daily at pre-set times: **10:00 / 16:00 / 22:00**.

Other features and protective functions

Heating priority – system will automatically switch on the filtration pump for 5 mins each hour to check the water temperature. Based on the water temperature settings the filtration pump may be switched on for heating or cooling. *Can be deactivated with a DIP switch.*

Anti-freeze protection – with water temperature below 4°C the system will automatically run the filtration pump every ½ hour in order to keep the water from freezing.

Salinator protection – with water temperature below 14°C the system will automatically deactivate the R2 relay output (Dosing/Atr2) to prevent the salinator from operating in cold water.

4. Electrical connection

DIN module

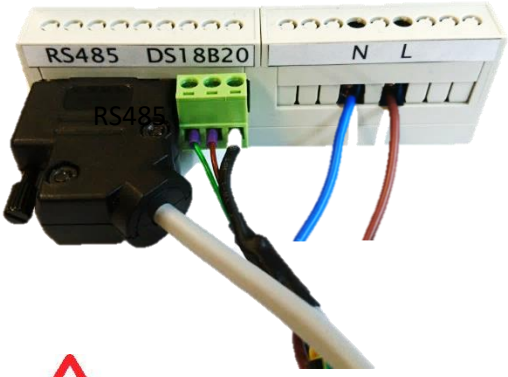

- **RS485** – Communication cable (connection to dosing unit)

- **Temperature sensor**
  D – (data / green wire)
  + – (+3,3 V / brown wire)
  - – (0,0 V / black or blue wire)

- **Power supply**
  N – neutral wire
  L – phase wire 230 V

IMPORTANT:
The temperature sensor must be connected, otherwise the DIN Module will not function properly (heating activation, dosing, operating protections, etc.).

Pre-set relay outputs

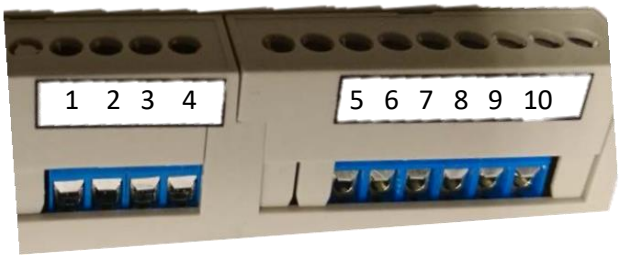

- **1/2** – R1 output (Filtration)
- **3/4** – R2 output (Dosing) / (Attraction2)
- **5/6** – R3 output (Lights)
- **7/8** – R4 output (Heating/Cooling)
- **9/10** – R5 output (Attraction)

Note:
The relay connection and suppression of their inductive load diagram is in Section 8, page 11..

5. Pairing the DIN and RC modules

To establish a radio communication between Din and RC modules, both units need to be paired. Required for pairing is the DIN module serial number – simply input the last 4 digits into the RC module. The DIN S/N is located on the side label of the DIN module; alternatively, also under the DIN microchip cover.

To access the pairing mode, take the turned-off RC module, press and hold the **"F1"** button and **press the** "⏻" button for at least 3 seconds. The display will light up and „0000" will be displayed.

0000
0022

a) Using the "**V**" or"**Λ**" buttons, select the desired number,
b) Press "**<>**" to move to the next digit,
c) Press "**SET/SEND**" to confirm changes and pair the device. The display will switch to normal screen.

VÁGNER POOL s.r.o.
DIN Module
S/N: DN18MO110022
100-250VAC/50-60Hz
Max. 12W

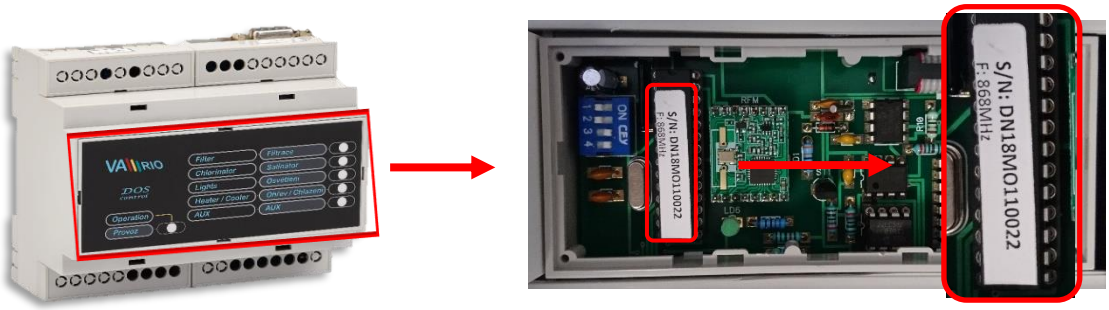

6. Unit notifications

DIN module

The statuses of the individual relay outputs are indicated by green LEDs (unit active = green LED steady on).

A flashing green LED indicates that the DIN module is under voltage or communicating with the RC. Rapid flashing indicates ongoing communication with a dosing station (connected with a cable).

RC module

Statuses of measured parameters and relay outputs are displayed on a 4-line screen.

VArioRC AerBus II Verze 3.0 Connecting	Default screen after RC start-up (after pressing the "ON" button). "Connecting" – a connection to the DIN module or dosing station is being initialized.
Filtration [ZAP] Dosing [ZAP] Temp 22°C [ZAP] Lights 014 Atr 015	Status [**ON**] - relay contact closed / output active Status [**OFF**] - relay contact closed / output active Status **22°C** - actual water temperature / heating [**ON**] Status **??°C** - filtration is not active (timer OFF), waiting for filtration ON Status **Lights** "**014**" - relay contact closed / lights ON with 14 mins remaining *Status **Atr** "**015**" - relay contact closed /output ON with 15 mins remaining*

7. Unit controls and configuration menu

7.1. Unit controls

The DIN module can be controlled by the RC remote module (using a radio frequency signal). An overview of all control buttons including configuration commands is listed below. The **F1 / F2 / F3 buttons are pre-programmed for easy access to Lighting / Attraction / Filtration functions**.

Quick access

F1

F2

F3

Control buttons:

SET SEND	**ENT ESC**
Λ	**<>**
V	**⏻**

F1	- By default Lights **(ON/Timer 15-240 min / 000 = VYP)**
F2	- By default Attraction **(Timer 15-120 min / 000 = OFF)**
F3	- By default Filtration (**AUTO / CL24** "ON with chlorine shock (24 hours)" **/** manual **ON / OFF**
SET/SEND	- Parameter change / Save changes = send to DIN module
ENT/ESC	- Confirm choice / Enter menu / Go back to higher menu
Λ	- Move up in menu / Increase parameter / Time set – hours
<>	- Move to next parameter / Heating - cooling mode / Switch to dosing unit / Paging
V	- Activate item / Move down in menu / Decrease parameter / Time set – minutes
⏻	- Sleep mode ON / Wake up / Quick access edit

7.2. Quick-access buttons

Using the **F1** / **F2** / **F3** buttons, you can easily control preset devices. If the default F1 (Lights) / F2 (Attraction) / F3 (Filtration) functions are not up to your choice, the button functions can be reprogrammed and/or renamed.

7.2.1. Changing the quick-access button function

With RC in the sleep mode, press and hold "**F2**" **+ press** "⏻" for at least 3 seconds. The display will light up and the actual button configuration will be displayed:

```
Lights          F1
Attraction         F2
Filtration            F3
Attraction 2
```

```
Lights            F3
Attraction      F1
Filtration         F2
Attraction 2
```

a) With repeated pressing of the "**F1**", "**F2**" or "**F3**" buttons the new function will be assigned,

b) Confirm changes with the "**SET/SEND**" button, the display will automatically refresh,

Note:
If you assign the same function to two buttons, (e.g. Lights for both F1 and F2 buttons), both buttons will control the same function.

7.2.2. Renaming the quick-access button functions

You can also rename the functions, should you not like the preset names.

Renaming the quick-access functions:
In the sleep mode (display off) press and hold the "**F3**" **+ press** "⏻" for at least 3 seconds. The display will light up and current configuration will be displayed, e.g.:

```
>Lights
 Attraction
 Attraction 2
```

```
>Shower
 Massage
 Attraction
```

a) Activate the renaming function by pressing the "**ENT/ESC**",
b) Select desired letter using the "**V**" or "**Λ**" buttons,
c) Move to next position with "**<>**",
d) Use "**F1**" to switch between UPPERCASE/lowercase,
e) Insert space with the "**F2**",
f) Select desired digit by repeated pressing of "**F3**",
g) Press "**SET/SEND**" to confirm and save changes, the display will automatically refresh,
h) Press "**ENT/ESC**" to skip (changes will not be saved).

7.3. DIN Module configuration (DIP switch)

Operating functions of the DIN module (heating priority, flow switch, dosing stations / chlorinators) can be configured with a DIP switch.

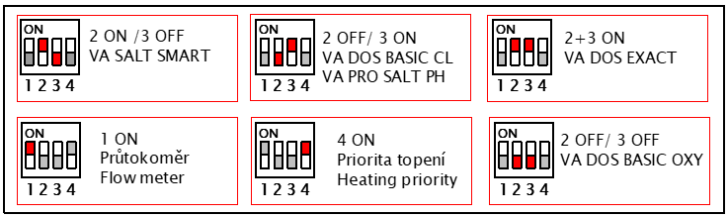

1	Flow switch – default OFF
2-3	Dosing station <> saltwater chlorinator
4	Heating priority – default ON

ATTENTION – with DIP switch 4 (heating priority) OFF, the **antifreeze protection and cell protection with water temperatures under 14 °C will be deactivated!** Temperature readings at 10, 14 and 20:00 hours will remain active.

7.4. Controlling the DIN module with RC module

5 outputs can be activated in the configuration menu: ***Filter pump*** with up to 4 programmable daily cycles and 2 user regimes, ***Dosing*** *(Salinator)* based on filtration time, ***Heating / Cooling*** function with regard to preset water temperature, ***Lights*** and ***Attraction*** (e.g. counterflow) with timer.

1. Press the "⏻" button to wake the RC from the sleeping mode.

2. Press the "**V**" button to enter the configuration menu:

```
 Atraction2
>Filtration
 Filtration-mode
 Lights
 Heating/Cooling
```

```
 Atr
>Time/Date
 Language
 Lights-setting
 Dosing
```

a) Press "**V**" to move down in the menu,

b) Press "**Λ**" to move up in the menu,

c) The "**>**" arrow indicates the selected parameter,

d) **Press the "ENT/ESC" key to enter to selected parameter menu. Flashing rectangle on the display indicates ongoing information transfer between the DIN and RC modules – wait for the communication to finish in order to change the parameter setting.**

3. The "Filtration" menu allows the user to set up to 4 running cycles within 24 hours:

```
07:00        10:00
12:00        15:00
16:00        19:00
21:00        23:00
```

a) In main menu, select "**>Filtration**" and press "**ENT/ESC**" button,
b) Press "**SET/SEND**" button to activate the timer set mode,
c) Press "**V**" to adjust minutes (1 click = +5 min),
d) Press "**Λ**" to adjust hours (1 click = +1 hour),
d) Press "**<>**" to move to the next timer,
e) Press "**SET/SEND**" to confirm and send changes to DIN module,
f) A "**Sending…**" message will be displayed.

Note:
The first cycle starting time (in this case 07:00) also determines the starting time for salinator/dosing unit in automatic operation mode. When setting the intervals, the first time must be lower than the second; also, you cannot pass midnight within the same interval (e.g. 09:30-06:00). System will not accept such invalid intervals..

4. The "Filtration-mode" menu allows the user to select the operating mode of filtration:

```
Filtration        [AUTO]
```

a) Select "**>Filtration-mode**" and confirm with „E**NT/ESC**",
b) Press "**V**" to scroll through modes (AUTO/ZAP/XXCL/VYP),
c) Press "**Λ**" to select mode,
g) Press "**SET/SEND**" to confirm and send changes to DIN module,
h) A "**Sending…**" message will be displayed.
i)

5. The “Lights“ and “Atr/Atr 2“ menus allow the user to set operating timers for these outputs with a 15 min. step (0-120 for Atr, 0-240/ON for Lights):

Lights	015min	Attraction	030mi
Lights	045min	Attraction	060mi
Lights	075min	Attraction	090mi
Lights	120min	Attraction	000mi

a) Select “**>Lights**“ and press “**ENT/ESC**“ button,
b) Press “**SET/SEND**“ button to start to set timer,
c) Press “**V**“ to decrease operation time (1 click = -15 min),
d) Press “**Λ**“ to increase operation time (1 click = +15 min),
e) Press “**SET/SEND**“ to confirm and send changes to DIN module,
f) A “**Sending…**“ message will be displayed.

Note:
*The quick-access F1 button (Lights by default) also allows permanent ON ((000 – **ON** – 015 – 030 … 240 min).*

6. The “Heating/Cooling” menu allows the user to set the heating / cooling and water temp.:

Heating 29°C

Cooling 27°C

Filtration [ZAP]
Dosing [ZAP]
Temperature25°C [-08]
Lights 014
Atr 015

g) In main menu, select “**>Temperature**“ and press “**ENT/ESC**“ button,
h) Press “**SET/SEND**“ button to start to set temperature,
i) Press “**V**“ to decrease temperature (1 click = -1°C),
j) Press “**Λ**“ to increase temperature (1 click = +1°C),
k) Press “**<>**“ to select operation heating or cooling mode,
l) Press “**SET/SEND**“ to confirm and send changes to DIN module,
m) A “**Sending…**“ message will be displayed.

Note:
Preset output delay *– in this case 8 mins remain to heating power ON (preset delay 10) and* ***allowed operating temperature range*** *are preset in the system. These technology-protecting parameters can be modified only by authorized person.*
The heating priority function can be configured with DIP Switch 4*. With heating priority deactivated, heating/cooling may be active only when the filtration is running. Also, the operating protections will not be active. Heating is OFF by default (temp setting), while heating priority default value is ON (page 5).*

7. The “Time/Date” menu allows the user to set system time and date – important for proper filtration and dosing/salinator functioning:

Time 14:10
Day 27
Month 07
Year 18

Verification code
0 0 0 0
Wrong code

n) Select “**>Time/Date**“ and press “**ENT/ESC**“ button,
o) Press “**SET/SEND**“ button to set time and date,
p) Press “**V**“ to adjust minutes (1 click = +5 min),
q) Press “**Λ**“ to adjust hours (1 click = +1 hour),
r) Press “**<>**“ to move to next parameter (d/m/y),
s) Press “**V**“ and “**Λ**“ to adjust the selected parameter,
t) Press “**SET/SEND**“ to confirm and send changes to DIN module,
u) As a safety precaution, a “**Verification code**” must be entered.
v) A “**Sending…**“ message will be displayed; in case wrong code is entered the “**Wrong code**” message will appear.

Note:
Default verification code is 1234*. Only an authorized person may change the verification code.*
When a wrong code is entered, changes will not be sent to the DIN module and the unit will return to original settings.

8. The “Language“ menu allows the user to select the language:

Czech

a) Select “**>Language**“ and confirm with “**ENT/ESC**“,
b) Press “**V**“ to select language (CZ/EN/HR/FR/DE/ES),
c) Press “**Λ**“ to select language,
d) Press “**SET/SEND**“ to confirm and send changes to DIN module,
e) A “**Sending…**“ message will be displayed

9. The “Lights-settings“ menu allows the user to choose a lights mode:

Select program	
Scene	01

f) Select “**>Lights-settings**“ and confirm with “**ENT/ESC**“,
g) Press “**V**“ to set mode (Scene/Bright/Next/etc.),
h) Press “**Λ**“ to choose mode,
i) Press “**<>**“ to adjust value (e.g.. Scene – 02/Bright – 50),
j) Press “**SET/SEND**“ to confirm and send changes to DIN module,
k) A “**Sending…**“ message will be displayed.

10. The “Dosing“ menu allows the user to set the working time of a salt water chlorinator with regard to total filtration time:

Filtration	660min
Dosing	100%
	[660min]
Time left	470min

w) In main menu, select “**>Dosing**“ and press “**ENT/ESC**“ button,
x) Press “**SET/SEND**“ button to activate the setting mode and set the salt-chlorination time in % of filtration time,
y) Pres “**V**“ to decrease the dosing time (1 click = -25%),
z) Press **“Λ“** to increase the dosing time (1 click = +25%),
aa) Press “**SET/SEND**“ to confirm and send changes to DIN module,
bb) A “**Sending…**“ message will be displayed.

Note:
The salinator/dosing unit operation time is directly based on the total filtration time as set in the “AUTO” mode. With filtration running in any other mode (manual ON/XXCL) this “extra” filtrating time is not calculated in total filtration time used for dosing.

7.5. Controlling the VA DOS dosing Station with RC module

In order to review or modify the pool water parameters and review the operating status of a dosing station on your RC module, follow these steps:

1. The dosing station must be connected with DIN module by a communication cable. The instructions below refer to dosing unit **VA DOS EXACT (2 “ON“ / 3 “ON“)**,


Illustrative image

2. The dosing unit must have the **RS485 (ON/Active)** communication activated. The setup for correct communication must be the following:

<u>DIN Module configuration:</u>
Under the DIN module front cover (black) a label shows the required positions of DIP switches for the connected device = **dosing unit (VA DOS EXACT):**

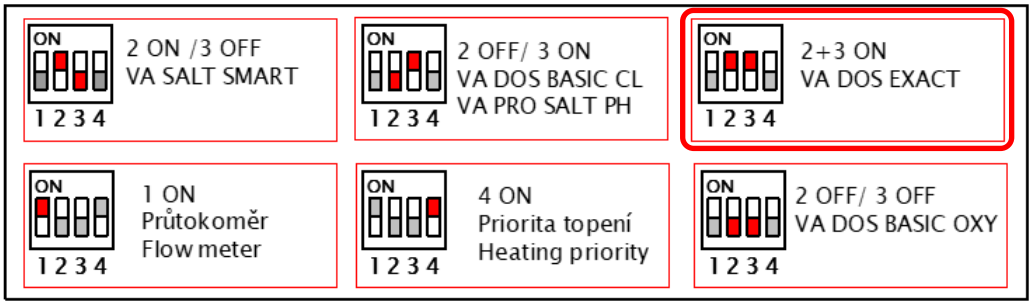

Dosing unit configuration:

VA DOS EXACT – ID: 1, Parity: NO, Speed: 2400, DOA=OFF,
VA DOS BASIC – ID: 2, Parity: NO, Speed: 2400, DOA=OFF,

3. Press the "⏻" button to wake the RC module from sleeping mode,

4. In the default RC screen, press the "**<>**" button to switch to the dosing unit screen (view could be changed **only if the dosing unit is connected by the communication cable to DIN** – for more details about connection go to section 3 of this manual). **If there is no dosing unit connected to the DIN module, the dosing station screen will not appear !!!**

```
Filtration              [ZAP]
Dosing                  [ZAP]
Temperature22°C         [ZAP]
Lights     014      Atr
                    015
```

"<>"

```
PH=7.2                 [≤7.0]
CL=0.6ppm              [≥0.8]
RX=610mV             T=25°C
Operation
OK
```

Note:

*The dosing station screen also displays the dosing unit operation statuses: "**Operation OK**" / or alarms "**OFA alarm**" / "**OFA stop**". The alarms cannot be deactivated from the RC – they must be reset directly on the dosing station by pressing the "**ENTER/CAL**" button.*

5. You may configure certain operating parameters of a connected dosing station form your RC module. The logic of the dosing unit menu is the same as of DIN module. Press the "**V**" button to enter the dosing station main configuration menu:

```
 Setpoint  PH
>Setpoint  CL
 Setpoint  RX
 AlrBand PH
```

```
 AlrBand CL
>AlrBand RX
 TotalFlow
 ResetFlow
```

```
 Active alarms
>Language
```

a) Press "**V**" button to move down in the menu,

b) Press "**Λ**" button to move up in the menu,

c) The "**>**" arrow indicates the selected parameter,

d) **Press the "ENT/ESC" key to enter the selected parameter menu. Flashing orange rectangle on the display indicates ongoing information transfer between the DIN/RC modules and the dosing unit – wait for the communication to finish in order to change the parameter setting.**

6. The “Setpoint PH“ menu allows the user to change pH settings of the dosing unit:

```
Setpoint  PH

>     7.0
```

a) Select “**>Setpoint PH**“ and press “**ENT/ESC**“ button,
b) Press “**SET/SEND**“ to activate pH setting mode,
c) Press “**V**“ to decrease pH value (1 click = -0,1 pH),
d) Press “**Λ**“ to increase pH value (1 click = +0,1 pH),
e) Press “**SET/SEND**“ to confirm and send changes to DIN module,
f) An “**OK**” message will appear at the bottom right of the display.

7. Menu “AlrBand pH“ allows the user to modify the value range for the pH alarm:

```
AlrBand  PH

>     2.5
```

a) Select “**>AlrBand**“ and press “**ENT/ESC**“ button,
b) Press “**SET/SEND**“ to start modify alarm range,
c) Press “**V**“ to decrease alarm range (1 click = -0,1 pH)
d) Press “**Λ**“ to increase alarm range (1 click = +0,1 pH)
e) Press “**SET/SEND**“ to confirm and send changes to DIN module,
f) An “**OK**” message will appear at the bottom right of the display.

Note:
*Other parameters such as **Redox (ORP)** and **free chlorine (CL)** can be adjusted the same way. To cancel unwanted parameter changes, press “**ENT/ESC**“.*

8. The “TotalFlow“ screen allows the user to see the total volume of filtered water. The “ResetFlow” screen shows the volume of filtered water within a resettable time interval:

```
TotalFlow

  0.000m3
```

```
ResetFlow

  0.000m3
        Read only
```

a) Select “**>TotalFlow** “ and press “**ENT/ESC**“ button,
b) “**Read only**“ = the parameter is only for information and cannot be modified.

9. The “Active alarms“ menu allows the user to see active alarms on the dosing unit (OFA stop / OFA alarm / AlrBand.
<u>Alarms can be deactivated only on the dosing unit using the “ENTER/CAL“ button</u>.

```
Active alarms
OFA alarms
AlrBand
```

```
Active alarms
OFA alarms
AlrBand
        Read only
```

a) Select “**>Active alarms**“ and press “**ENT/ESC**“ button,
b) “**Read only**“ = parameter is only for viewing.

10. The “Language” menu allows the user to change the dosing station and also the DIN module menu language. When you change the menu language of the dosing unit using the RC module, the DIN module will automatically switch to the same language as selected on the dosing station (available languages: **<u>CZ/DE/EN/ESP/FR/HR</u>**).

```
Language

>     Czech
```

g) Select “**>Language**“ and press “**ENT/ESC**“ button,
a) Press “**SET/SEND**“ to start language selection,
b) Press “**V**“ button to move down in the language list (e.g. English),
c) Press “**Λ**“ button to move up in the list (e.g. Espanol),
d) Press “**SET/SEND**“ to confirm and send changes to DIN module,
e) An “**OK**” message will appear on the display.

Note:
*If the dosing unit is connected to the DIN module, the menu language can only be changed in the dosing unit screen (step 4 above). The language settings in the RC main menu will be shown as “Read only” and cannot be modified. **Menu language can also be changed on the dosing station; in that case please restart the RC after the change to load the selected language.***

7.6. Controlling the VA SALT SMART chlorinator with RC module

In order to review or modify the pool water parameters and review the operating status of a saltwater chlorinator on your RC module, follow these steps:

Illustrative image

1. Chlorinator must be connected to the DIN module with a communication cable. The following steps refer to the **VA SALT SMART chlorinator (2 "ON" / 3 "OFF")**,

   <u>DIN module configuration:</u>
   Under the DIN module front cover (black) a label shows the required positions of DIP switches for the connected device = **VA SALT SMART**.

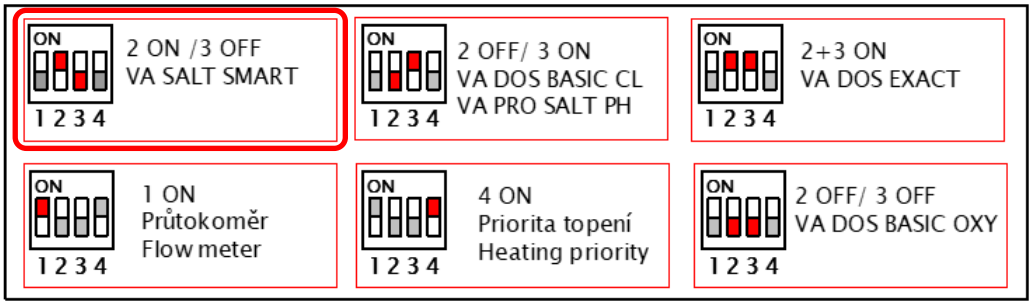

2. Press the "⏻" button to wake the RC module from sleeping mode,

3. In the default RC screen, press the "**<>**" button to switch to the chlorinator screen (view could be changed **<u>only if the chlorinator unit is connected by the communication cable to DIN</u>** – for more details about connection go to section 3 of this manual). **<u>If there is no chlorinator unit connected to the DIN module, the chlorinator screen will not appear!!!</u>**

Filtration	[ON]		
Dosing	[ON]	"<>"	
Temp 22°C	[ON]		
Lights 014	Atr 015		

PH=7.1	[≤7.2]
RX=610mV	[≥700]
Power	25%
Mode	Automat.

Note:

*The saltwater chlorinator unit can signalize the **operating mode** and also **alarms/notifications**. In case of an alarm, the alarm can be reset only on the chlorinator unit – not via VArio – by pressing the "**OK**" button.*

4. You may configure certain operating parameters of a connected chlorinator form your RC module. The logic of the chlorinator menu is the same as that of DIN module. Press the "**V**" button to enter the chlorinator unit main configuration menu:

```
 Setpoint   pH
>Setpoint   RX
 Max. power      (%)
 Cell voltage    (V)
```

vn in the menu,

n the menu,

elected parameter,

```
 Salinity
>Warnings
 Alarms
 Operation mode
```

Press the "ENT/ESC" key to enter the selected parameter menu. Flashing orange rectangle on the display indicates ongoing information transfer between the DIN/RC modules and the dosing unit – wait for the communication to finish in order to change the parameter setting.

5. The "Setpoint PH" menu allows the user to change pH settings of the chlorinator unit:

```
Setpoint   pH

>     7.2
```

a) Select "**>Setpoint PH**" and press "**ENT/ESC**" button,
b) Press "**SET/SEND**" to activate pH setting mode,
c) Press "**V**" to decrease pH value (1 click = -0,1 pH),
d) Press "**Λ**" to increase pH value (1 click = +0,1 pH),
e) Press "**SET/SEND**" to confirm and send changes to DIN module,
f) An "**OK**" message will appear at the bottom right of the display.

Note:

*You may adjust the value of the RX parameter exactly the same way. Cancel any unwanted changes by pressing the "**ENT/ESC**" button. The default code for parameter changes is "**1234**". The code may be changed only by a pool professional with a service module. When a wrong code is entered, changes will not be saved and the unit will return to its default screen.*

6. The "Max. power" menu allows the user to limit the maximum output of the salinator cell (0-100%):

```
Max. power   (%)

 80 %
```

a) Select "**>Max. power**" and confirm with "**ENT/ESC**",
b) Press "**SET/SEND**" to activate value adjustment,
c) Press "**V**" to lower power (-1 % / 1x click),
d) Press "**Λ**" to increase power (+1 % / 1x click),
e) Press "**SET/SEND**" to confirm and send changes to DIN module,
f) An "**OK**" message will appear at the bottom right of the display.

7. The "Cell voltage" menu displays the actual potential on the salinator cell:

```
Cell voltage  (V)

 3,5  V
      Read only
```

a) Select "**>Cell-potential**" and confirm with "**ENT/ESC**",

b) The parameter is only informative - "**Read only**", it cannot be adjusted.

8. The “Salinity“ menu displays the actual salt concentration – only when a salinity sensor is attached:

Salinity 4,5 g/l Read only

a) Select “**>Salinity**“ and confirm with “**ENT/ESC**“,

b) The parameter is only informative - “**Read only**“, it cannot be adjusted.

Note:
*Salt concentration value is displayed directly on the VA SALT SMART chlorinator unit or on the RC module **only when a salinity sensor is attached to the chlorinator unit**. With no salinity sensor attached, an “**Error**“ message will be displayed.*

9. The “Warnings“ menu shows current active warning notifications:

Warnings Water temp Salt low Low pH	Warnings Salt high read only

a) Select “**>Active alarms”** and confirm with “**ENT/ESC**“,

b) The parameter is only informative - “**Read only**“, it cannot be adjusted.

Note:
Warnings are information about operation status of the saltwater chlorinator unit. They indicate whether the parameters are OK or need adjustment (temperature, salinity, pH, etc.)

10. The “Alarms“ menu shows all active alarm notifications.
Alarms may be deactivated only directly on the salinator unit by pressing “OK“).

Alarms No alarms	Alarms No flow Read only

a) Select “**>Alarms**“ and confirm with **”ENT/ESC**“,

b) The parameter is only informative - “**Read only**“, it cannot be adjusted.

Note:
Warnings are information about operation status of the saltwater chlorinator unit. They indicate whether the parameters are OK or need adjustment (e.g. ORP probe check, unit overheating, cell short-circuit, communication with cell, no flow, etc.)

11. The “Operation mode“ menu allows the user to change the operation mode of the saltwater chlorinator unit:

Operation mode > Automatic

a) Select “**>Operation mode**“ and confirm with “**ENT/ESC**“,
b) Press “**SET/SEND**“ to activate value adjustment,
c) Press “**V**“ to change mode (Automatic/Manual/Semiautomatic),
d) Press “**Λ**“ to change mode,
e) Press “**SET/SEND**“ to confirm and send changes to DIN module,
f) A “**Sending**” message will appear at the bottom right of the display.

Note:
You may adjust the value of the RX parameter exactly the same way. Cancel any unwanted changes by pressing the “ENT/ESC“ button. The default code for parameter changes is “1234“. The code may be changed only by a pool professional with a service module. When a wrong code is entered, changes will not be saved and the unit will return to its default screen.

8. Relay connection and suppression of their inductive load

AC control coils diagram:

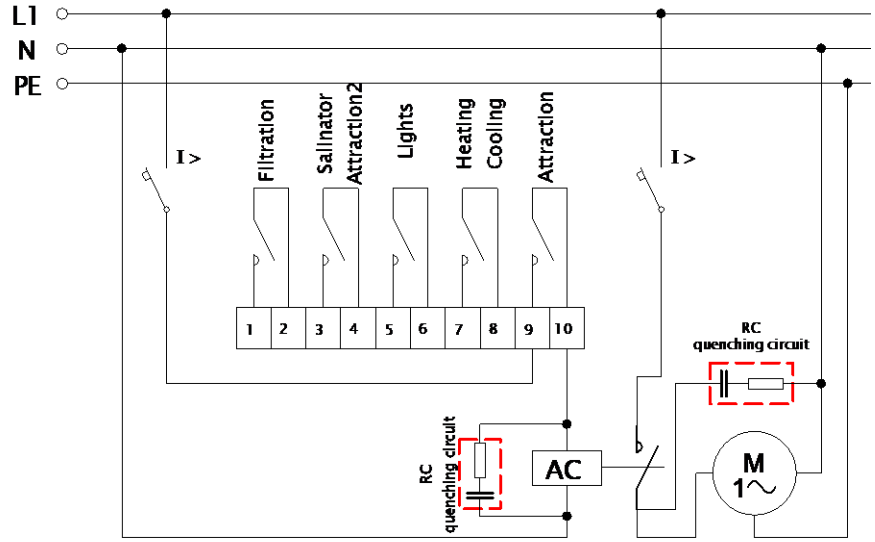

DC control coils diagram:

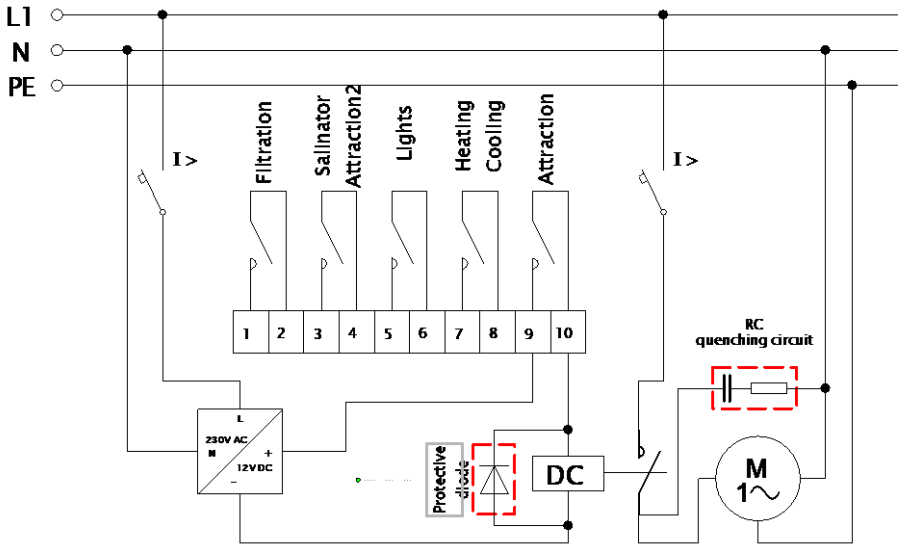

This is the recommended output connection of the VArio DIN Module for connection of inductive load inside a breaker box (diagram is valid for one output = in this case the "Attraction" contact). Connect the other outputs with inductive load accordingly.

The outputs are designed for general use as potential-free contacts, which provides for a wide range of utilization.

For DC coil switching / inductive load suppressing, we strongly recommend using a parallel diode connection (in closing direction).

Following these rules and recommendations will result in significant lifetime extension of contacts and relays in the DIN module. In addition, the failure rate of electronic systems placed inside the breaker box, which could be caused by disturbances from inductive load switching, will be substantially reduced (e.g. electromotors, the contactor control coil transformers and relays).

10. Accessories – Communication with Dosing Stations / Salinators

<u>VArio in a complete breaker box</u>:

+ 516130 - CABLE – BREAKER BOX TO DOSING
(Connector on breaker box wall -> dosing station)

<u>DIN module built in into an older breaker box + dosing station</u>:

516131 - CABLE – VARIO INTO OLD BR. BOX
(extension DIN module -> breaker box wall)

+ 516130 – CABLE - BR.BOX TO DOSING

<u>Separate DIN module +</u> <u>connection</u> **<u>directly to a dosing station</u>:**

+ 516132 - CABLE - SEPARATE DIN TO DOSING
(DIN module -> dosing station)

Yellow	**"–"**	(minus)
Brown	**"+"**	(plus)

VA DOS – dosing station connector
(inside dosing station package)

Connection:

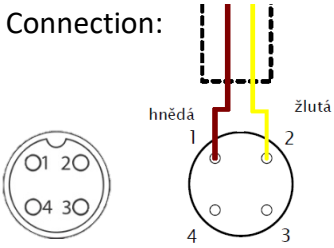

VA SALT SMART – communication module
(+ 516141 – VARIO COMM. MODULE VA SALT SM.)

Connection:

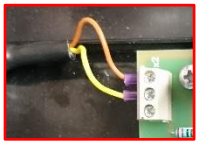

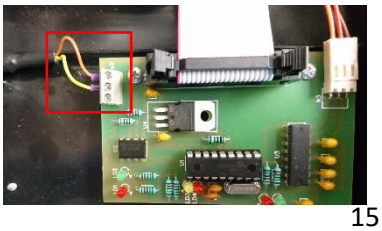

DECLARATION OF CONFORMITY

The company VÁGNER POOL s.r.o. hereby declares, that all below-listed products meet the necessary requirements for placing the product on the market:

Product line: **VArio – Pool Technology Remote Control System**
Directive: **RED Directive č. 2014/53/EU**

Module: **DIN Module**

Applicable norms: **EN 62368-1: 2014/A11:2017, EN 60730-1: 2016, EN 62479: 2010**
EN 301 489-1 V2.1.1, EN 301 489-3 V2.1.1
EN 300 220-1 V3.1.1, EN 300 220-2 V3.2.1

Module: **WiFi Module**

Applicable norms: **EN 62368-1: 2014/A11:2017, EN 62311: 2008**
EN 301 489-1 V2.1.1, EN 301 489-3 V2.1.1, EN 301 489-17 V3.1.1
EN 300 220-1 V3.1.1, EN 300 220-2 V3.2.1, EN 300 328 V2.1.1

Module: **RC Module**

Applicable norms: **EN 62368-1: 2014/A11:2017, EN 62479: 2010**
EN 301 489-1 V2.1.1, EN 301 489-3 V2.1.1
EN 300 220-1 V3.1.1, EN 300 220-2 V3.2.1

Module: **Servce Module**

Applicable norms: **EN 62368-1: 2014/A11:2017, EN 62479: 2010**
EN 301 489-1 V2.1.1, EN 301 489-3 V2.1.1
EN 300 220-1 V3.1.1, EN 300 220-2 V3.2.1

Conformity was checked by Technický skúšobný ústav Piešťany (TSÚ), which – based on test report No. 190500058/1-4 – issued Conformity Certificates to all of the above-listed modules.

Declaration Issue Date: **20. 3. 2019**

Producer Stamp and Signature:

VAGNER POOL
VÁGNER POOL s.r.o. Nad Safinou 348
252 50 Vestec Praha - západ
IČ: 27121082 DIČ: CZ27121082

PRODUCER:
VÁGNER POOL s.r.o.
Nad Safinou II 348
252 50 Vestec, Praha západ
Česká republika
www.vagnerpool.com
info@vagnerpool.com
+420 244 913 177

Further information and documents to the VArio system can be found at www.variopools.com